HENRY Radio

TED HENRY W6UOU

11240 W. OLYMPIC BLVD., LOS ANGELES 64, CALIF.

BRadshaw 2-0861

2K-3

LINEAR AMPLIFIER

TUNE
LOAD
2K-3
F. A. VOLT.
REF. PWR.
FWD. PWR.
F. A. GRID
BAND
PUSH TO
OPERATE

OPERATING INSTRUCTIONS FOR

2K-3 LINEAR AMPLIFIER

The 2K-3 Linear Amplifier is a one stage amplifier designed for SSB, CW, FSK, and AM operation with any exciter capable of 80 to 160 watts PEP output. The 2K-3 is capable of maximum legal input on the amateur bands from 3.5 to 29.7 megacycles. In addition the amplifier can be operated on frequencies outside the amateur bands. On frequencies far removed from the amateur bands, it may be necessary to re-tune the appropriate cathode-pi input module. These plug-in modules are located adjacent to the 3-500Z tubes and carry the individual band designations 10 through 80 meters.

The 2K-3 is a one piece floor console consisting of a complete RF deck and a separate power supply chassis. The amplifier is normally supplied for operation from a three wire 220 volt 50-60 cycle circuit. The unit can quickly be adapted for operation from 110 volts 50-60 cycles by rewiring the terminal block mounted on the right front corner of the power supply chassis behind the console front door. Both connections are pictorially depicted elsewhere in these instructions.

INSTALLATION

Remove the 2K-3 console from its shipping carton and place it upright near its intended operating position. Inspect it for any signs of damage in shipment. The 3-500Z tubes and their air system chimneys have been removed from the amplifier for shipment and must be installed prior to operation. To accomplish this installation, remove the perforated wrap-around cover from the RF deck by taking out the six screws (three on each side) on the bottom of the side panels and which hold the cover in place. It is also necessary to remove the two flat Phillips head screws on the top front of the cover and which fasten the cover to the panel trim. When all eight screws have been removed, grasp the cover firmly and spring outward on the bottoms of the two side panels so that the cover can be lifted free of the amplifier proper. It may be necessary to insert a large screw driver between the wrap-around and the chassis itself in order to free the cover sufficiently for removal. Now remove the interior top shield which can be identified by its square perforations and which is held in place by nine flat head screws. Loosen these screws so that the shield cover can be slipped in the keyed retaining holes and lifted from the amplifier.

The 3-500Z tubes can now be inserted in their respective sockets which are located at the left rear of the amplifier compartment. Next set the air system chimneys in place making certain that the pyrex cylinders are pushed down flush against the chassis and are inside of and firmly gripped on the outside of the glass by the spring clips mounted on the chassis for

this purpose. Exercise care to ascertain that all of the clips are on the outside of the glass chimneys. When the chimneys are in place visually check to be certain that the formed tops of the chimneys allow at least 1/4" clearance from the envelope of the tube so that the air can circulate freely from the bottom to the top of each tube and thus allow the air cooling system to operate as intended. Now fasten each individual plate lead to its appropriate anode connector. The 3-500Z tubes are shipped with their anode connectors in place so it is necessary only to remove the flat head screw in the top of each connector, gently flex the parasitic choke and plate lead until the mounting hole in the plate lead is positioned precisely above the screw hole in the anode connector. Now re-insert the flat headed screw, tightening it firmly so as to make a secure electrical connection between the plate lead and the anode connector. Do not, however, exert too great downward pressure on the anode connector since such excessive pressure might result in a hair line fracture of the glass envelope where the anode support enters the envelope.

At this time, visually check the cathode-pi plug-in modules. There are five of these modules labeled respectively 10, 15, 20, 40, 75-80 and they are located in a line directly adjacent to the 3-500Z tubes. The object of a visual check is to see that they are firmly seated, each in its own socket and have not been dislodged in shipment.

The top internal shield may <u>now</u> be returned to its original position.

and secured in place with the nine flat head screws. The outside wrap-around cover may be left off until the amplifier has been fully connected and tested.

The various inter-connecting cables may now be attached to the amplifier. These are three in number.

1. The coax lead to the antenna should be plugged into the SO-239 RF output connector on the lower left of the rear apron of the amplifier (when looking at the back panel from the rear). A PL-259 coax plug is provided in the amplifier accessory kit in case the antenna lead of the station does not already use such a plug.

2. The black RG-58A/U input cable can now be fastened to the BNC input connector on the rear of the amplifier. The other end of this cable is terminated by an RCA phono plug. This should be inserted in the RF output socket of the exciter. The RCA phono plug is the proper plug for use with the Collins "S" line or KWM-2. If the exciter does not use such an output RF socket, it may be necessary to change this plug to the proper matching plug or to use an appropriate adaptor.

3. The grey relay control cable may now be plugged into the RCA phono receptacle on the rear panel of the 2K-3. This cable provides for the actuation of the amplifier in the transmit condition. It requires only a shorting relay contact. IMPORTANT! Do not apply any voltage to this relay control circuit since the amplifier's internal relay is actuated by its

self-contained 12 volt DC relay supply. When used with the Collins "S" line or KWM-2, this relay cable can be plugged directly into the socket marked "Antenna Relay." When the 2K-3 is excited by a driver unit other than Collins it may be necessary to consult the circuit diagram of the exciter to find an available unused relay contact which is normally "open" in the receive condition and is "closed" in the transmit condition. All current SSB transmitters and transceivers have such a relay contact available for amplifier control, and most have the contact available at a terminal or plug on the back panel of the exciter.

The power cable of the 2K-3 may now be connected to the AC mains by means of the heavy three-wire power cord. The amplifier comes from the factory connected for three-wire 220 volt 50-60 cycle operation. Select a three prong plug which matches the power receptacle at the operating position and fasten the plug to the amplifier's power cable, taking great care to determine that 220 volts is applied to the black and white wires and the neutral lead is connected to the green wire of the power cable. DAMAGE TO THE AMPLIFIER CAN RESULT IF THE GREEN WIRE IS CONNECTED TO ONE OF THE 220 VOLT LEADS.

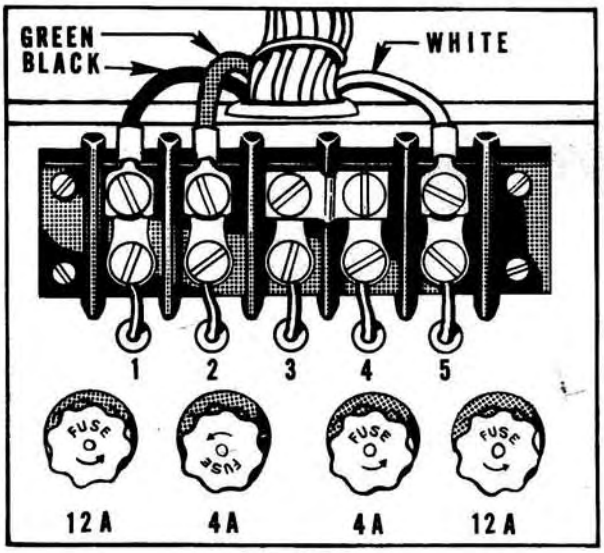

220 V.A.C.

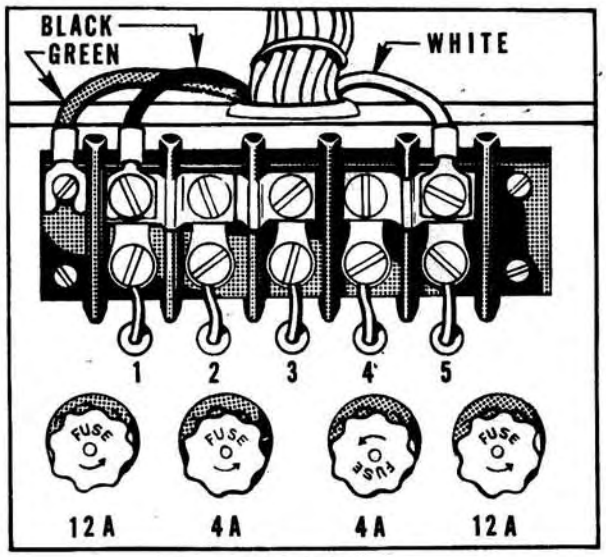

115 V.A.C.

OPERATION

To place the amplifier in operation, set the band selector switch to the desired band and set the tune and load controls to the calibration readings for the indicated bands as shown on the final test sheet on the last page of these instructions.

When the amplifier is not turned on, its internal relay automatically connects the output of the exciter into the antenna transmission line. Without turning on the amplifier, tune and load the exciter in its normal fashion directly into the antenna. Then place the driver in stand-by position. Now turn the 2K-3 on by pushing the red power switch to the left of the legend "Push To Operate." This red button should now be illuminated and the dial lights should come on. Look down through the top cover perforations to verify that the filaments of the 3-500Z tubes are lighted. Listen for the whisper sound of the blower to be certain that it is operating and place your hand directly above each tube to make certain that air is circulating in the cooling system. Place the multi-meter selector switch in the P.A. Volt position. A reading between 280 and 320 should be obtained indicating high voltage of 2800 to 3200 volts.

Some operators may be apprehensive when the anodes of the 3-500Z tubes show color. Such apprehension is unwarranted.

They will show a dull cherry red color at 800 ma. The tubes when so operated are well within their rated operating limits and no damage will occur, provided the tune control has properly dipped the plate current. Do not operate the tubes with 800 ma. current in an off-resonance condition, and do not operate them even at 400 ma. for long periods of time in an off-resonance condition.

Now place the 2K-3 multi-meter switch in the P.A. grid position. Without applying RF drive to the exciter, actuate the push-to-talk switch of the exciter so that the amplifier relay operates to the transmit mode. Check the amplifier plate current meter at the upper right hand corner of the front panel to verify that the 3-500Z tubes are drawing current. With normal line voltage and with no RF drive applied, the resting current of the two 3-500Z tubes will be about 100 to 150 milliamperes. Place the exciter in operation and gradually apply carrier, increasing the drive until the multimeter of the 2K-3 indicates 100 to 125 ma. grid current. Quickly check the plate ammeter and adjust the tune control for lowest dip, indicating resonance. If the load condenser is properly set, the plate ammeter will show a reading of 400 ma. If the current is less than 400 ma., increase the load tuning dial slightly. If it is more than 425 ma., decrease the load tuning control slightly. Each time the load control is changed, re-dip the tuning control since the exact resonance point on the tuning control is affected by a change in the setting of the load control. Also check the grid current reading to verify that

it remains between 100 to 125 ma. If it has changed, readjust the output of the exciter until the reading on the amplifier grid meter is once again in the proper range. It may be necessary to repeat this series of tuning and loading adjustments several times until the desired readings of 100 to 125 ma. on the grid meter and 400 ma. on the plate meter are obtained. These readings should be attained plus or minus 5 to 10% and are not critical values. It will be noted that the higher the frequency band, the more precisely the load and tune adjustments must be made and conversely, the lower the frequency band, the broader.

The exciter output may now be increased to maximum. With such full drive the plate meter should advance to 800 ma. or more and the grid current to 250 ma. or more. Neither reading is a critical function. Do not leave the amplifier in the full drive, full load mode for more than a few seconds at a time. The procedure is intended for test purposes to verify peak power conditions. It is appropriate to note that in the reduced drive (100-125 ma. grid current) state as just described with loaded plate current of 400 ma., the plate meter dip is quite sluggish. This condition will be exaggerated if at the same time the load control is at an over-coupled setting. If, therefore, the operator experiences genuine difficulty in determining the dip point, he should retard the load control until it is in an under-coupled condition at which time the plate dip will be sharper and more easily identified. The load control can then be gradually increased once more until the properly coupled condition of 400 ma. as described above is once again obtained.

It probably should be noted at this point also that once the operator has familiarized himself with the performance of the amplifier and feels confident of his various resonance and load calibrations, he may adopt a convenient and effective alternate tuning method, namely "Tune for maximum output."

This is accomplished by applying RF drive to the amplifier with the multi-meter switch set to the FWD.PWR. position. Then simply adjust the tune and load controls for maximum amplifier output. At this point, the various operating parameters will automatically be properly adjusted.

The exciter may now be placed in operation on SSB. Under normal operation with speech the plate meter will peak at about 400 ma., and with the multimeter switch set to P.A. grid, the grid meter will indicate peaks of 50 to 100 ma. To avoid exceeding the FCC legal power limitation of one kilowatt metered input which is two kilowatt PEP input, the operator may use the familiar calculation of voltage times current -- voltage being the reading indicated by the multimeter in the P.A. Volt position and current being the reading in amperes of the plate meter on voice peaks. According to FCC regulations, it is necessary also to include the plate input of the final stage of the exciter when making such computations, since a part of the driving power is fed through to the antenna by a grounded grid amplifier. Depending on the line voltage at the operating position, maximum legal input will normally be found to exist with a voice peak meter reading of slightly less than 400 ma.

If it is desired to operate AM linear, the amplifier should be tuned and loaded as previously described, then for actual operation the drive should be reduced once again to 100 ma. at which point the linear will operate at one kilowatt input and an AM linear output of about 350 watts.

The 2K-3 will, of course, operate CW at its full two kilowatt rating. To operate the unit on CW most efficiently at the FCC allowable one kilowatt input, tune and load the amplifier as previously described. Do not, however, reduce grid drive. Maintain the full 250 to 300 ma. of grid drive and reduce power by retarding the load control until a maximum of one kilowatt input is obtained. Remember that during this reloading adjustment the tuning control must be re-adjusted for lowest dip. Power output in this condition will be in the 600 watt range.

The operator will note that the multi-meter switch has positions for RF output "Forward Power" and "Reflected Power." After all previously described adjustments have been completed, the switch may be placed in the "Forward Power" position and the concentric knob adjusted for full scale reading. When the switch is placed in the "Reflected Power" position the SWR of the antenna system may be ascertained. If the SWR of the antenna is good there will be almost no reflected power. Most properly adjusted antennas will result in a reflected power reading under 100 and in no case should the amplifier be operated into an antenna with a reflected power reading of more than 200. If there is any real question in the operator's mind concerning the SWR of his antenna, the SWR can be measured with the output of his exciter before the linear is placed in operation.

PROTECTIVE SYSTEM

The 2K-3 has four separate overload protective systems. The high voltage circuit is monitored by an electrical re-set overload relay. Any high voltage short will automatically trip the overload relay which de-energizes the primary power relay. The overload relay is reset by momentarily depressing the red push button located on the front left corner of the power supply chassis and can be reached by removing the front door of the power supply cabinet. IMPORTANT: Do not remove the front door while the amplifier is turned on. It will be noted that a neon lamp directly above the red re-set button will glow when a short circuit has actuated the overload relay. When the overload relay has been reset by depressing the red re-set button the neon lamp should go out.

Certain high voltage shorts can occur which would allow the high voltage filter condensers to discharge through the plate meter. To prevent damage to the plate meter under these circumstances, a one and one-half ampere fuse has been inserted in series with the meter. If the meter should appear inoperative subsequent to such a short, replace the meter fuse which can be found adjacent to the RF input plug on the rear apron of the RF deck.

The primary circuit of the 2K-3 is protected by a 15 ampere circuit breaker. This breaker is located behind the front door of the power supply cabinet and is located on the front center of the power supply chassis. Normally this breaker will not be tripped by a high voltage short since the overload

relay will be tripped before the circuit breaker. It is possible, however, that certain short circuit conditions in the power transformer or elsewhere in the primary circuit might occur in front of the overload relay and in this case the primary circuit breaker will afford protection.

The 2K-3 employs 110 volts 50-60 cycles to power the fan and the relay power supply and this circuit is protected by two 3 ampere 3AG fuses also located behind the power supply door at the front left corner of the chassis.

Certain countries have 220 volt two wire AC mains. The 2K-3 may be operated from such mains but in this case a 100 watt 220 volt to 110 volt step-down isolation transformer must be employed to provide the required 110 volts to run the blower and relay power supply. When the 2K-3 is operated from a conventional 220 volt three wire system, this 110 volt requirement is of course taken directly from the neutral wire.

SERVICE NOTES

The 2K-3 has been carefully designed to minimize service problems. Only the highest quality components have been employed throughout to further reduce the possibility of equipment failure. The following hints are offered in case service should be required. IMPORTANT: Whenever it is necessary to remove the RF shield, make certain that the high voltage is turned OFF. An automatic shorting bar located at the top of the center vertical panel grounds the high voltage whenever the top shield is removed. If the high voltage is ON when this top shield is removed, the meter fuse will blow and it is possible that damage to the meter could occur.

If it should be necessary to operate the amplifier with the top shield removed, or the power supply door open, first disengage the shorting bar from its center pin before turning ON the high voltage. Do not make a practice of operating the amplifier with the top shield OFF and the high voltage exposed. Do so only for purposes of checking, adjusting or servicing and exercise the greatest possible caution at all times, since the high voltage present in the 2K-3 can cause injury or death.

SERVICE NOTES

1. If amplifier does not come on when Red Power Switch is pushed:
   a. Be certain power cable is properly connected to AC mains.
   b. Check 3 amp fuses.

c. Measure voltage output from 12 volt DC relay power supply.

d. By use of ohmeter, verify that power switch is in fact closing.

2. If amplifier comes on as soon as AC cable is plugged into mains and will not turn OFF when power switch is actuated, suspect shorted or inoperative contact on power switch.

3. If no high voltage shows on multimeter when amplifier is turned on and meter is placed in High Voltage position:

   a. Check Fuse Sub-Panel behind door of power supply. Overload may be tripped. If this has occurred, neon light will be lighted. Press reset button and neon light should go out indicating overload relay has been reset.

4. If no plate current is indicated when amplifier is turned ON and exciter is placed in transmit condition with no RF drive applied: (in normal operation resting current between 100-150 ma. will appear)

   a. Check continuity of Relay Control Cable between exciter and amplifier.

   b. Ascertain if amplifier antenna relay is being actuated.

   c. If a and b are positive, suspect poor contact by center pole of antenna relay. Polish with relay burnishing tool. (Sand paper strip from match book will serve). Also try bending relay center arm slightly to increase pressure on the contact when closed.

5. If plate meter shows current as soon as high voltage is turned ON and before exciter is placed in transmit condition:

a. Check to see whether antenna relay is being prematurely actuated. If it is, normal resting current of 100-150 ma. will be shown on plate meter. Fault is likely to be a short in relay control circuit. Unplug RCA phono plug from rear panel of amplifier to localize the area of short.

b. If antenna relay is not actuated but plate current shows, suspect grid to filament short in one of the 3-500Z tubes.

6. The operator who has carefully studied the circuit diagram at the back of the instruction manual will note that the filaments of the 3-500Z tubes are operated in series resulting in a total filament power supply specification of 10 volts at 15 amperes (that is 5 volts at 15 amperes for each tube).

The reasons for such series operation are, first, that the resultant 15 amperes is considerably easier to handle with smaller filament leads, less voltage drop and less heating at filament lead connection points. Secondly, and most important, it permits the use of a compact and highly efficient toroid type filament choke. The use of such a choke materially increases the driving efficiency and linearity of the amplifier throughout its frequency range and, in addition, contributes to the light weight and compact design of the amplifier while at the same time permitting maximum utilization of the air cooling system, since the small filament choke in no way impedes the free flow of air in the cooling system.

One small disadvantage of the series filament configuration is that it prohibits the use of the amplifier with only one of its two 3-500Z tubes in operation. Thus, if there is a failure or a suspected failure of one of the tubes, it is necessary to replace the bad or suspected bad tube before the amplifier can be operated. A course of wisdom would be to keep one spare 3-500Z tube on hand at all times.

7. If no plate current is indicated, although amplifier seems to operate normally, replace the 1-1/2 ampere meter fuse on rear panel of the amplifier.

8. If overload relay will not remain set, try to determine if a high voltage short is tripping relay. If no evidence of such short, measure resistance directly across overload relay coil. When the calibrating resistor is properly connected and adjusted, effective resistance will be 3-4 ohms.

9. If obvious high voltage short is evidenced by audible arcing, open the power supply console door. Unplug the high voltage connecting plug from the bottom plate of the RF deck. If short persists, it has been localized in the power supply module.

10. If the short circuit is in the RF deck, remove cabinet wrap-around and shielded top screen after first being certain that the high voltage is turned OFF. By inspection, such a short can sometimes be identified by a blackened or charred area. Use an ohmmeter from high voltage lead to ground to verify shorted condition and apply appropriate remedy.

11. If the short circuit is in the power supply deck, use the visual inspection and ohmmeter method again. Successively disconnect the major components, starting with the filter condensers, and proceed backward toward the transformer. Next, disconnect the filter choke and .1 mfd resonating condenser. Check appropriate interconnecting leads. Check the resistance of the solid state rectifiers (four in number). They should register infinite resistance.

12. If the 15 ampere circuit breaker has been actuated by a short circuit condition, suspect a short in the primary circuit, the power transformer, itself, or possibly shorted rectifier diodes.

13. The 2K-3 employs individual 50 ohm to 50 ohm pi-cathode input matching modules to achieve low input SWR and maximum drive efficiency. These modules, five in number, and labeled 10, 15, 20, 40, 75-80 are arranged in a row adjacent to the 3-500Z tubes.

    The modules are individually adjusted at the factory for the center frequency on each band. They are broadly tuned and will not normally need re-tuning. The units are plug-in and may be removed from their sockets for ease of disassembly if service should ever be required.

    If the amplifier is to be operated on a frequency far removed from the amateur bands, it may be advisable to retune the appropriate input mudule. First place an SWR bridge in the drive cable between the exciter and the amplifier. Next, operate the amplifier in the normal

manner and determine the SWR of the input circuit. If the ratio is higher than 1.5 to 1, loosen the lock nut on the input module to be adjusted and, using an insulated alignment tool, adjust the tuning slug until the reflected power reaches minimum. This will normally be less than 1.5 to 1 SWR. Be certain to use an insulated aligning tool and exercise great caution since the 2500 high voltage must be on while this adjustment is being effected. For frequencies midway between the amateur bands it may be necessary to order special input modules from the factory which can be plugged in in place of the standard units.

14. Should there be excessive grid current and no plate current, suspect a discontinuity in the high voltage circuit. Probably no high voltage is being applied to the 3-500Z anodes.

15. The multimeter has been calibrated for high voltage before the amplifier is shipped from the factory. If it should be necessary to recalibrate it, follow this procedure:

    a. Turn amplifier <u>OFF</u>

    b. Remove RF deck wrap-around and top shield.

    c. Disengage high voltage grounding bar.

    d. Connect a properly calibrated volt meter between center pin of the shorting bar and ground. Set volt meter on 5000 volt scale.

    e. Turn amplifier <u>ON</u> and compare amplifier meter reading with the reference meter.

f. If recalibration is required, it can be accomplished by adjusting the knurled potentiometer shaft mounted on the junction box at the right rear of the RF deck.

g. Exercise great caution. Extreme high voltage is present.

16. For no grid current, intermittent grid current, or low grid current:

a. If no drive shows on multimeter and plate meter does not drive up, turn amplifier OFF and operate exciter directly into antenna. Place multimeter in forward power position to determine if exciter is delivering normal output.

b. Intermittent grid current. Check continuity of drive cable and input BNC coax socket. Try operation on another band to see if problem is confined to one band. Trouble may be localized in the appropriate pi-cathode plug-in module. It may be necessary to remove the bottom plate to reach the two section input band switch which is located under the RF chassis near the sockets for the 3-500Z tubes.

c. With full drive from the exciter with carrier, grid current will normally show up more than 250 ma. If it shows less than this figure suspect low output from the exciter.

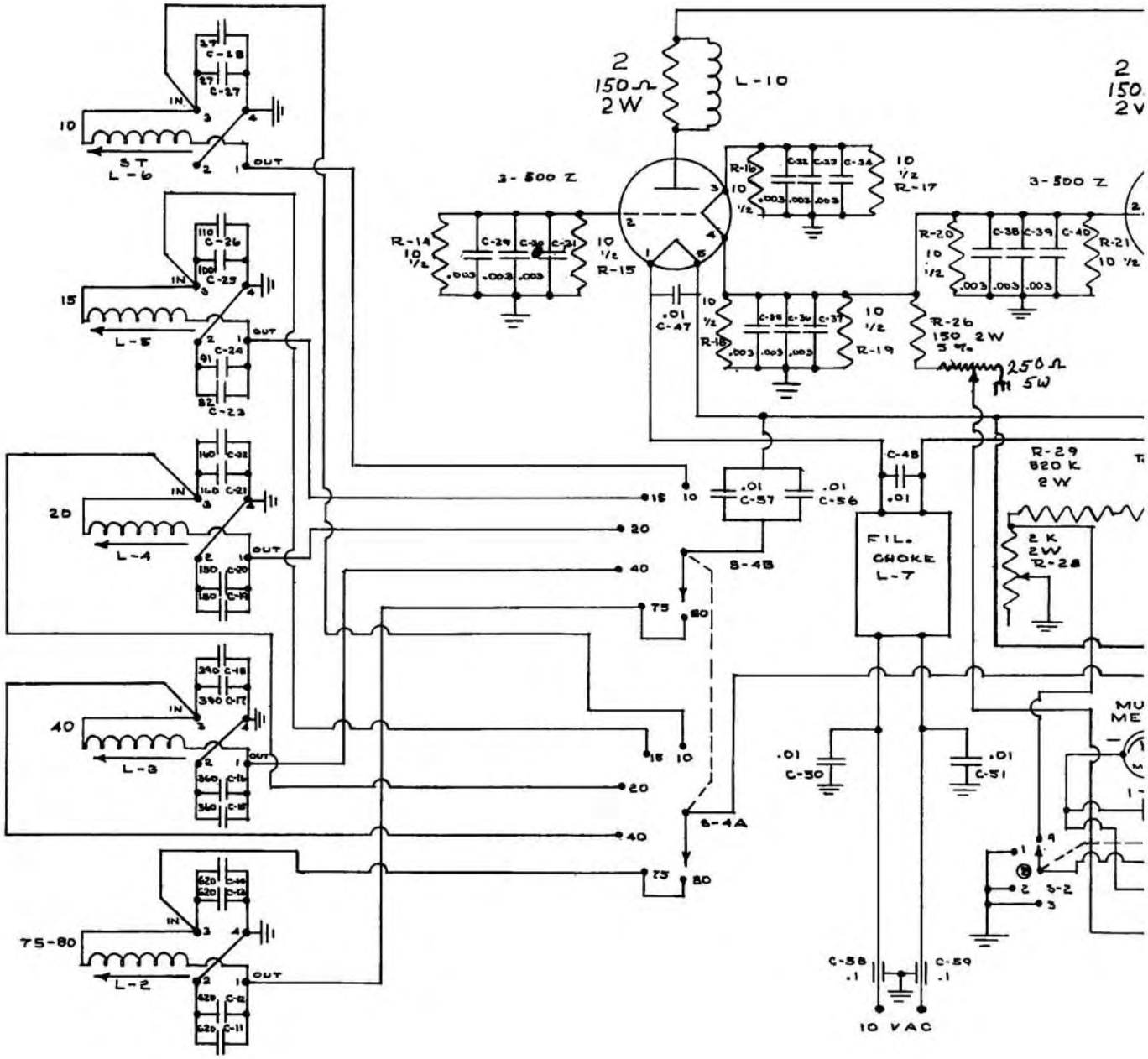

2
150Ω
2W
L-10
3-500 Z
R-14
10 1/2
C-29
C-30
C-31
10 1/2
R-15
R-16
C-32
C-33
C-34
10 1/2
R-17
R-18
C-35
C-36
C-37
10 1/2
R-19
.01
C-47
R-20
C-38
C-39
C-40
R-21
R-26
150 2W
5%
250Ω
5W
C-48
.01
R-29
820 K
2W
2 K
2W
R-28
FIL.
CHOKE
L-7
.01
C-57
.01
C-56
S-4B
S-4A
.01
C-50
.01
C-51
C-58
.1
C-59
.1
10 VAC
S-2
10
15
20
40
75-80
L-2
L-3
L-4
L-5
L-6
IN
OUT
C-18
C-27
C-26
C-25
C-24
C-23
C-22
C-21
C-20
C-19
C-18
C-17
C-16
C-15
C-14
C-13
C-12
C-11

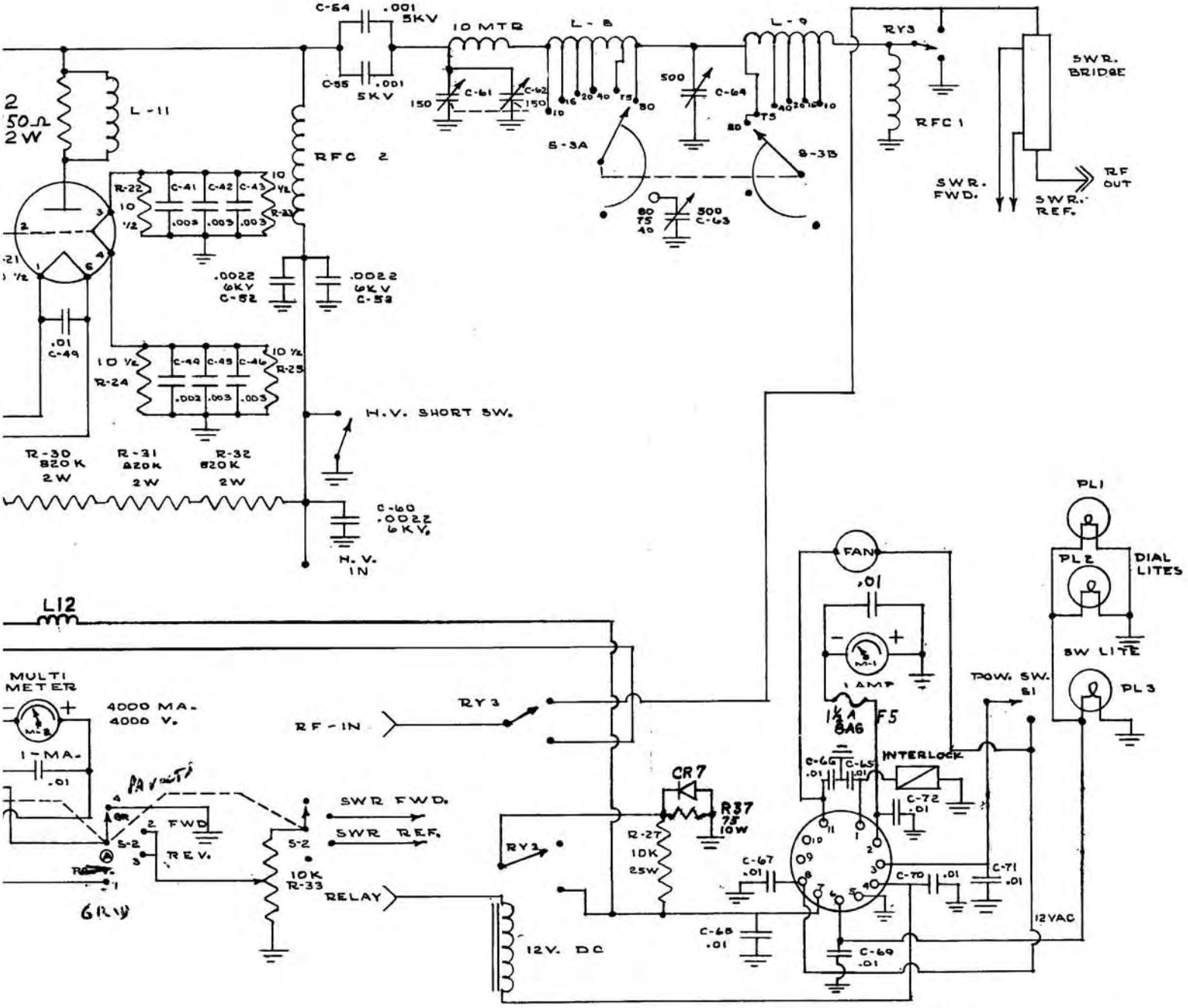

2K-3

HENRY RADIO INC.

LOS ANGELES, CALIFORNIA

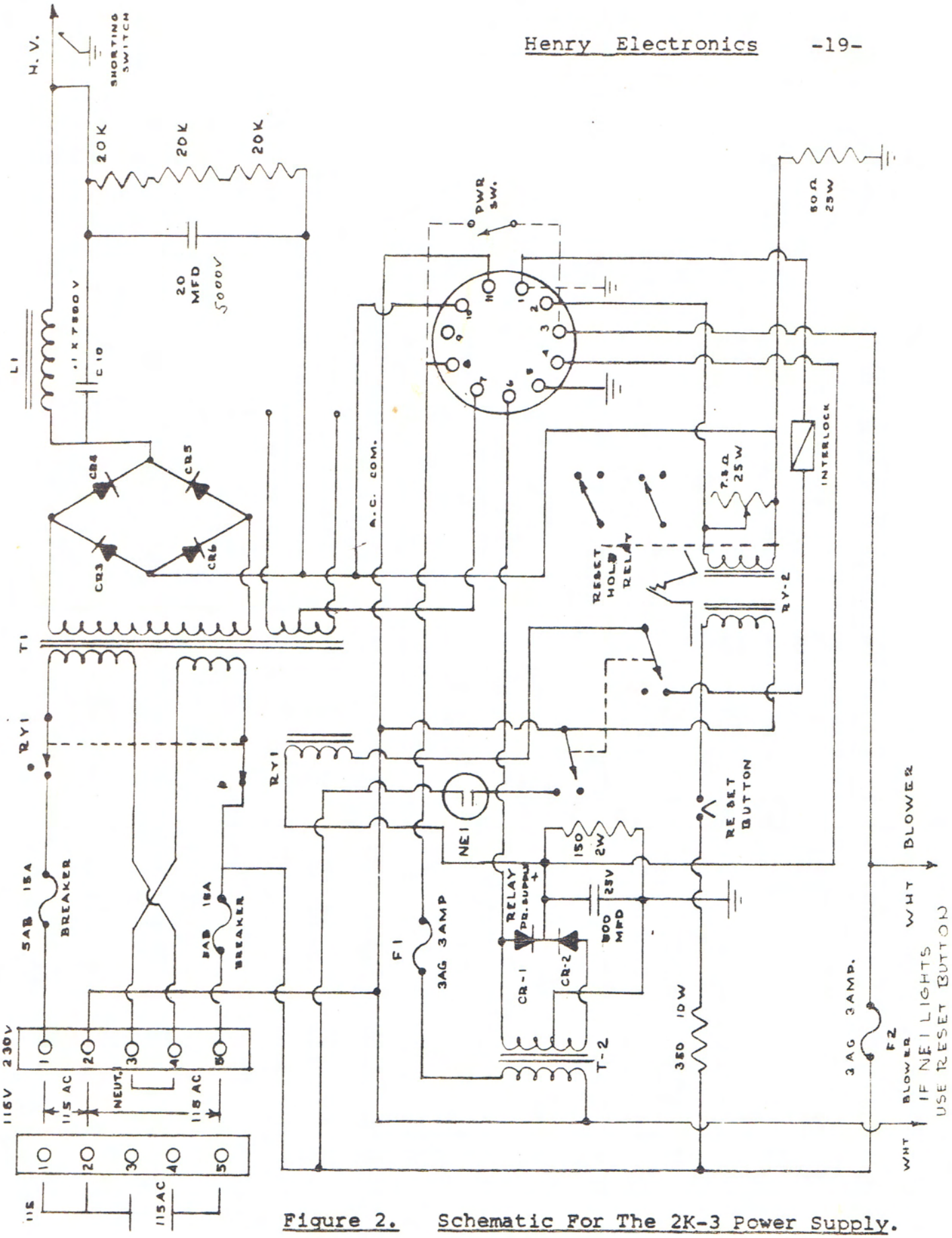

Figure 2. Schematic For The 2K-3 Power Supply.

PARTS LIST 2K-3

C9	500 MFD 25 WVDC
C10	.1 MFD 7500 VDC
C11-14	620pF Silver Mica
C15-16	360pF Silver Mica
C17-18	390pF Silver Mica
C19-20	150pF Silver Mica
C21-22	160pF Silver Mica
C23	82pF Silver Mica
C24	91pF Silver Mica
C25	100pF Silver Mica
C26	110 pF Silver Mica
C27-28	27pF Silver Mica
C29-46	.003 MFD 500V Disc
C47-51	.01 MFD 600V Disc
C52-53	.0022 MFD 6000 Disc
C54-55	.001 MFD 5KV
C56-57	.01 MFD 600V Disc
C58-59	.1 MFD Feed Thru
C60	.0022 MFD 6000V Disc
C61-62	150 pF / Section
C63-64	500 pF/ Section
C65-74	.01 MFD 600V Disc
C75	20 MFD 5000V Test
CR-1,2	1N3491 Diodes
CR3-6	5244 Diodes
CR-7	1N2808B Diode
F1-2	3AG 3 Amp
F3-4	15 Amp Breaker
F5	1-1/2 Amp 8 AG
T1	Plate & Filament Transformer
T2	Relay Transformer 12V
RY1	Relay Primary Plate
RY2	Overload Relay
RY3	RF Relay

RFC1	RF Choke
RFC2	Modified #800
R1	150 ohm 2 Watt
R11	350 ohm 10 Watt
R12	7.5 ohm 25 Watt
R13	50 ohm 25 Watt
R14-25	10 ohm 1/2 Watt
R26	150 ohm 2 Watt 5%
R27	10K 25 Watt
R28	2K 2 Watt Pot
R29-32	820K 2 Watt
R33	10K 1/2 Watt Pot
R34-36	20K 100 Watt
R37	75ohm 10 Watt
L1	Choke, Filter
L2-6	Coil Forms (Input)
L7	Filament Choke
L8	Tank Coil
L9	L-Section
L10-11	Parasitic Chokes
L12	40uH $\pm$ 20%
M1	Plate Meter 0-1 amp
M2	Multi-Meter 0-1 Ma.
S1	Power Switch (push type)
S2	SWR-Voltage-Current switch
S3A,B	Band Switch
S4A,B	Input Switch
PL1	Pilot Light 1815
PL3	Switch-light 330
NE1	Neon Indicator
SWR1	SWR Bridge

STANDARD WARRANTY

Henry Radio warrants each new radio product manufactured by it to be free from defective material and workmanship and agrees to remedy any such defect or to furnish a new part in exchange for any part of any unit of its manufacture which under normal installation, use, and service discloses such defect, provided the unit is delivered by the owner to us intact, for our examination, with all transportation charges prepaid to our factory, within ninety days from the date of sale to original purchaser and provided that such examination discloses in our judgment that it is thus defective. Should a malfunction be suspected, write in detail to our Service Department for suggestions concerning the operation, repair or return of your unit if it should prove necessary.

This warranty does not extend to any of our radio products which have been subjected to misuse, neglect, accident, incorrect wiring not our own, improper installation, or to use in violation of instructions furnished by us, nor extend to units which have been repaired or altered outside our factory, nor in cases where the serial number thereof has been removed, defaced or changed, nor to units used with accessories not manufactured or recommended by us.

Any part of a unit approved for remedy or exchange hereunder will be remedied or exchanged by Henry Radio without charge to the owner.

This warranty is in lieu of all other warranties expressed or implied and no representative or person is authorized to assume for us any other liability in connection with the sale of our radio products.

Henry Radio reserves the right to make any improvements to its products which it may deem desirable without obligating itself to install such improvements in its previously manufactured products.

Henry Radio Los Angeles, Calif.